Experimental Study of the Effect of Crude Palm Oil (Non-Newtonian Fluid) Viscosity on Increasing Flowrate Capacity

Bela Amelia[1)], Amnur Akhyan[2)].
[1,2] *Department of Mechanical Engineering, Politeknik Caltex Riau, Pekanbaru, Indonesia*

E-mail: *1)belaamelia@alumni.pcr.ac.id, *2)akhyan@pcr.ac.id

Abstract: Crude Palm Oil's viscosity level is very influential in the distribution in palm oil mills. This research shows that the high temperature will cause the viscosity to decrease. The force given to Crude Palm Oil can also reduce its viscosity levels. This proves that Crude Palm Oil is a Non-Newtonian fluid. This test shows that Crude Palm Oil with a temperature below 60°C has a discharge that is still changing from the first minute to the third minute. Meanwhile, Crude Palm Oil with a temperature above 60°C has a discharge that does not change after the first minute. From this, it can be concluded that 60°C is the best temperature for palm oil mills in the distribution of Crude Palm Oil.

Keywords: Viscosity, Crude Palm Oil, Flow Capacity

1. Introduction

Industrial development in Indonesia continues to increase every year. This progress can not be separated from the palm oil industry, seen in the number of palm oil mills spread across Indonesia, especially in Riau Province. According to data from the Directorate General of Plantations in 2017-2021, Riau Province occupies the first position in palm oil production in Indonesia. With an area of 2.8 million hectares of oil palm plantations, Riau Province in 2021 is recorded to have produced palm oil of up to 10.2 million tons, where the percentage growth in the last five years reached 11.97%.

One of the main products of palm oil is Crude Palm Oil. Crude Palm Oil is obtained from the extraction of oil palm fruit flesh (mesocarp). The Crude Palm Oil then will be filtered and purified to ensure it is free from contamination and dried to get the standard specifications of Crude Palm Oil.

Crude Palm Oil has important physical characteristics, including viscosity, density, fatty acids, iodine number, melting point, mist point, saponification number, and solid fat content.[1] In pumping Crude Palm Oil in palm oil mills, problems are often found in the fluid's viscosity. Viscosity states the size of the friction that occurs in the fluid. The more viscous a fluid is, the more difficult it is to flow, and the harder it is for an object to move in the fluid.[2]

Based on the field survey that has been conducted at PT. Tamora Agro Lestari, Crude Palm Oil is distributed to storage tanks using a centrifugal pump at a temperature of 50°C - 60°C. The temperature is maintained by embedding a heat exchanger coil in the pipe. The high temperature causes the viscosity of Crude Palm Oil to decrease, thereby facilitating pump performance in its distribution. However, high temperatures can also cause cavitation of the pump. In the research that will be conducted, Crude Palm Oil will be tested with a temperature variation of 30°C to 80°C with a single pump system.

In a study by (Arijanto et al., 2015) on "Analysis of the Effect of Viscosity of Water and Coconut Oil on Centrifugal Pump Performance, " his research results show that the viscosity value also affects the discharge value. The greater the viscosity value, the smaller the pump discharge value. It is proven that the maximum discharge value of water fluid is 36 l/m, while the maximum discharge value of coconut oil fluid is 17 l/m.[3]

Subsequent research was conducted by (Elin Yusibani et al., 2017) from the Department of Agricultural Product Technology, Syiah Kuala University, regarding the "Measurement of Viscosity of Several Palm Oil

---

[1] Hasrul Abdi Hasibuan, "Kajian Mutu Dan Karakteristik Minyak Sawit Indonesia Serta Produk Fraksinasinya". Pusat Penelitian Kelapa Sawit, Vol. 14, No. 1 Tahun 2012: 13.

[2] Ariyanti, E.S. dan Agus, M, 2010, "Otomasasi Pengukuran Koefisien Viskositas Zat Cair Menggunakan Gelombang Ultrasonik," Jurnal Neutrino, vol. 2, No. 27 Agustus 2015

[3] Arijanto, Eflita Y., Franklin, T. (2015). "Analisis Pengaruh Kekentalan Fluida Air dan Minyak Kelapa Pada Performansi Pompa Sentrifugal" Semarang: Universitas Diponegoro

Cooking Oil Products After Heating.". In this study, five samples of palm cooking oil that had been heated were taken to measure their viscosity using the falling ball method. The results showed that the lowest viscosity of palm cooking oil was 770.33 Pa.S and the highest value was 1186.57μPas. The difference in the value of palm cooking oil's lowest and highest viscosity coefficient reached 45%. The heating of the palm cooking oil is carried out for one hour. From the research, it can be concluded that the viscosity value of palm cooking oil after being heated shows an increase in the viscosity value.[4]

2. Research Methods

A. Research Methodology Flowchart

In this study, several stages will be carried out in testing Crude Palm Oil.

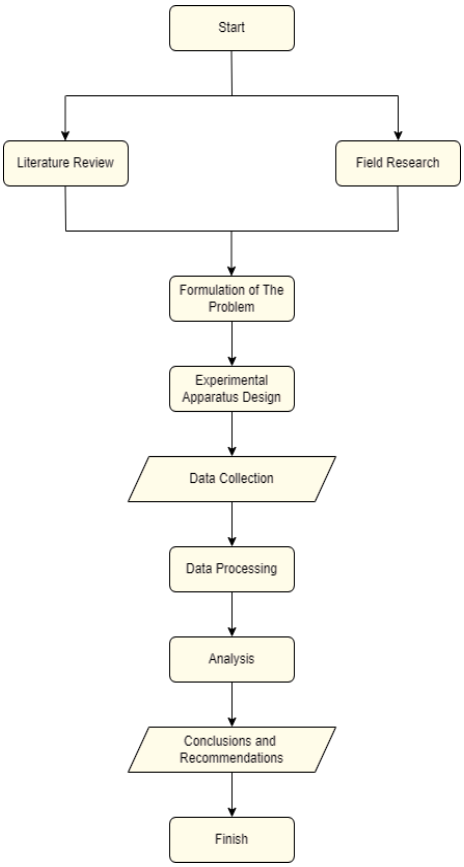

Figure 1. Research Methodology Flowchart

B. Field Research

Field research that has been done is visiting PT. Tamora Agro Lestari is located in Serosah Village, Hulu Kuantan District, Kuantan Singingi Regency, Riau. The field research activities carried out were observing palm oil mills and conducting interviews to collect initial data as a reference for problem formulation.

In this field research, it was found that the problem that occurs in pumping Crude Palm Oil is its viscosity. So Crude Palm Oil must be heated continuously so that the viscosity decreases. However, high temperatures will have an impact on pump cavitation.

C. Experimental Component Design

The design of this experiment uses a single pump system with a discharge of 35 lpm. The pipe used is Galvanized steel pipe 1 inch and uses a ball valve type valve. The reservoir used has a volume of 43.27 liters. The working principle of this experiment is that Crude Palm Oil is heated to the desired temperature (30°C -

[4] Yusibani, E., Al Hazmi, N., & Yufita, E. (2017). "Pengukuran Viskositas Beberapa Produk Minyak Goreng Kelapa Sawit Setelah Pemanasan". Banda Aceh: Universitas Syiah Kuala.

80°C) using a tubular heater. After the desired temperature is reached, the fluid will flow. Crude Palm Oil flows into the storage tank. The discharge pressure of the pump can be seen on the pressure gauge. The turbine flowmeter reads the flowed Crude Palm Oil discharge. Crude Palm Oil is pumped back to the main reservoir to be filled and reheated when the fluid has filled the storage tank.

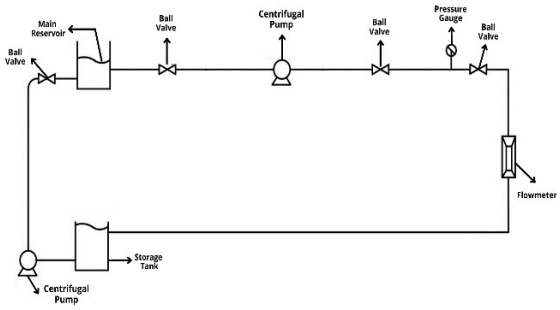

Figure 2. Experiment Apparatus Design

D. Theoretical Calculations

1) Flow Pipe Cross-Sectional Area

The pipe used is a galvanized pipe with a diameter of 1 inch = 0.02667m (galvanized inside diameter). This pipe was chosen based on its suction, thrust, and resistance to high temperatures. Galvanized has a relative roughness value (ε) = 0.15 mm = 0.000015 m. So the cross-sectional area of pipe (A) is:

Known:

D = 0.02667 m

Asked: the cross-sectional area of the pipe (A)

Answer:

$$A = \frac{\pi}{4} D^2$$

$$A = \frac{3.14}{4}(0.02667^2)$$

$$A = 5.58\ x\ 10^{-4}\ m^2$$

So, the cross-sectional area of a 1" Galvanized pipe is 5.58 x 10^{-4} m^2.

2) Average Flow Speed

The average flow speed is the Crude Palm Oil discharge ratio per cross-sectional area of the pipe used.

Known:

$Q = 35\ lpm = 5.83\ x\ 10^{-4}\ m^3/s$

$A = 5.58\ x\ 10^{-4}\ m^2$

Asked: Average flow speed (V)

Answer:

$$V = \frac{Q}{A}$$

$$V = \frac{5.83\ x\ 10^{-4}\ m^3/s}{5.58\ x10^{-4}\ m^2}$$

$$V = 1.044\ m/s$$

So, the flow speed in flowing Crude Palm Oil is 1.044 m/s.

3) Relative Roughness of Pipe

This value is used in calculating the pipe friction factor, which is then used in the equation to calculate the friction loss in a pipe for a flowing fluid.

Known:

$\varepsilon = 0.000015\ m$

$D = 0.02667\ m$

Asked: Relative roughness of pipe $\left(\frac{\varepsilon}{D}\right)$

Answer:

$$\frac{\varepsilon}{D} = \frac{0.000015}{0.02667}$$

$$\frac{\varepsilon}{D} = 5.62\ x\ 10^{-4}$$

So, the value of the friction factor in laminar flow is: $\frac{64}{Re}$

E. Testing on the Density of Crude Palm Oil

The process of testing the density of Crude Palm Oil is carried out to determine the substance content. The high fluid density will impact the mass amount in each fluid volume. The density test for Crude Palm Oil was carried out at the Fluid Machinery Laboratory, Polytechnic Caltex Riau.

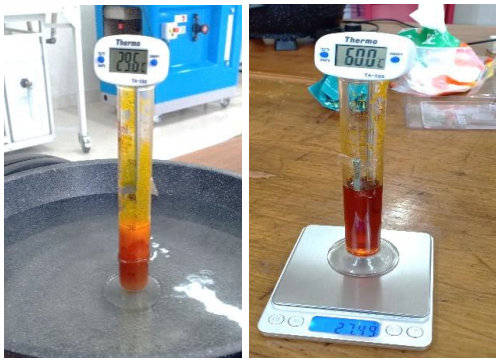

a b

Figure 3. Testing on the Density of Crude Palm Oil

Figure 3. shows the process of weighing Crude Palm Oil mass and boiling Crude Palm Oil in an electric pan. In this test, it can be seen the physicochemical changes that occur when Crude Palm Oil is heated. This test was carried out with variations in room temperature (26°C) up to 80°C.

F. Testing on the Viscosity of Crude Palm Oil

The process of testing the viscosity of Crude Palm Oil is carried out to determine the viscosity of Crude Palm Oil. This test was carried out at the Fluid Machinery Laboratory, Polytechnic Caltex Riau. This viscosity test was carried out with room temperature variations from 26°C to 80°C. The purpose of this temperature variation is to determine the changes in viscosity that occur in Crude Palm Oil when heated and to look for the best viscosity-temperature of Crude Palm Oil. As is known, Crude Palm Oil is a Non-Newtonian fluid. So that when given pressure and temperature, there will be a change in the viscosity of the Crude Palm Oil.

a b

Figure 4. Testing on the Viscosity of Crude Palm Oil

In this test, temperature variations have been carried out to determine changes in the viscosity of Crude Palm Oil. Figure 4. shows the heating process of Crude Palm Oil starting from a temperature of 30°C up to 80°C. Viscosity testing was carried out using a Brookfield Viscometer with a rotation of 60 RPM.

G. Testing on the Flowrate of Crude Palm Oil

This test is carried out to determine the flowrate flowed by the centrifugal pump using Crude Palm Oil. The different viscosity at each temperature influences the flow rate. In this test, the discharge of Crude Palm Oil will be measured five times with temperature variations of 80°C, 70°C, 60°C, 55°C, 50°C, 40°C, and 30°C.

3. Result and Discussion

This experimental test equipment is designed with a reservoir that can accommodate up to 40 liters of Crude Palm Oil. The pipe used is a galvanized pipe with a diameter of 1 inch so that it can withstand high temperatures when Crude Palm Oil is heated. To heat Crude Palm Oil, the author uses a 1000-watt tubular heater and a ball valve. In distributing Crude Palm Oil, the BM 15/6 centrifugal booster pump is also assisted. And to measure the flow rate of Crude Palm Oil, the author uses a Turbine Flowmeter.

The Effect of Temperature On the Density of Crude Palm Oil

When the Crude Palm Oil has been heated, the phenomenon of the change in the form of Crude Palm Oil which previously thickened, becomes more liquid. Then the change is seen from the physical color of Crude Palm Oil which was once reddish-orange, to blackish-brown color. This is due to changes in physicochemical properties, especially free fatty acids in Crude Palm Oil.

Table 1. Density Data of Crude Palm Oil

Temperature (°C)	Mass (gr)	Volume (ml)	Density (kg/m^3)
26.2	27.52	30	917.34
30	27.51	30	917.32
35	27.51	30	917.28
40	27.51	30	917.25
45	27.51	30	917.20
50	27.51	30	917.10
55	27.51	30	917
60	27.49	30	916.34
65	27.49	30	916.20
70	27.47	30	913.67
75	27.47	30	913.50
80	27.45	30	913.47

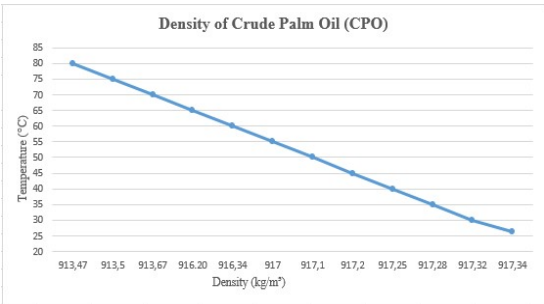

Figure 5. The Density Chart of Crude Palm Oil

Figures 6. and Table 1. shows that the density test for Crude Palm Oil decreases with increasing temperature. This happens due to the expansion of Crude Palm Oil so that it will produce a density that is smaller than the previous one. The existence of this expansion makes the mass of Crude Palm Oil also decrease. When Crude Palm Oil is heated, the substance in the fluid's substance will expand temperature drops again, and Crude Palm Oil will shrink because the molecules of the substance are in a solid state. While in the liquid form will have a much to move.

The Effect of Temperature On the Viscosity of Crude Palm Oil

Table 2. Viscosity Data of Crude Palm Oil

Temperature (°C)	Rotor	Rotation (RPM)	Viscosity (Pa.S)
26.2	2	60	$6.83x10^{-1}$
30	1	60	$5.2x10^{-2}$
35	1	60	$4.18x10^{-2}$
40	1	60	$3.5x10^{-2}$
45	1	60	$2.96x10^{-2}$
50	1	60	$2.48x10^{-2}$
55	1	60	$2.16x10^{-2}$
60	1	60	$2.09x10^{-2}$
65	1	60	$1.96x10^{-2}$
70	1	60	$1.88x10^{-2}$
75	1	60	$1.87x10^{-2}$
80	1	60	$1.87x10^{-2}$

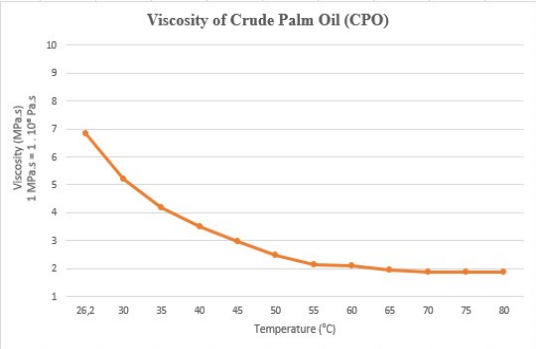

Figure 6. The Viscosity Chart of Crude Palm Oil

In this test, temperature variations have been carried out to determine changes in the viscosity of Crude Palm Oil. Figure 7 and Table 2 show that the results of the Crude Palm Oil viscosity test decreased with increasing temperature. In addition, the influence of viscometer spindle rotation also affects the viscosity of Crude Palm Oil. The difference in the spindle used is seen from the viscosity of the fluid to be tested so that it can be different from the use of the spindle. Crude Palm Oil's viscosity can change when pressed. It can become more liquid or denser. And the high temperature causes the viscosity of the fluid to become more dilute.

The spindle puts pressure on the Crude Palm Oil, resulting in a change in its viscosity. This proves that Crude Palm Oil is classified as a Non-Newtonian Pseudoplastic fluid. This is because the viscosity changes when the shear rate is applied. Viscosity reduction occurs markedly, but shear force increases. The presence of temperature also plays a role in the viscosity of Crude Palm Oil. When Crude Palm Oil has reached room temperature, the physical changes of Crude Palm Oil will return to normal. Crude Palm Oil will thicken again when left for a while and freeze like wax on its surface.

After seeing the research results by varying the temperature, at temperatures below 60°C Crude Palm Oil tends to experience significant changes in viscosity. So, the viscosity of Crude Palm Oil has not yet reached a constant point. Meanwhile, when Crude Palm Oil has reached a temperature above 60°C, the viscosity tends not to change anymore and reaches a constant point. So the authors conclude that the best temperature in the distribution of Crude Palm Oil is 60°C.

The Effect of Viscosity on Increasing Flowrate

In this test, the flowrate of Crude Palm Oil will be measured five times with temperature variations of 80°C, 70°C, 60°C, 55°C, 50°C, 40°C, and 30°C.

Table 3. Crude Palm Oil Flow Test Data

T (°C)	Q_1 (lpm)	Q_2 (lpm)	Q_3 (lpm)	Q_4 (lpm)	Q_5 (lpm)
30	8.70	8.72	8.75	8.75	8.80
40	12.40	12.48	12.50	12.50	12.52
50	18.48	18.50	18.50	18.50	18.51
55	21.50	21.50	21.50	21.51	21.51
60	25.52	25.52	25.52	25.52	25.52

70	27,50	27,50	27,50	27,50	27,50
80	34,40	34,40	34,40	34,40	34,40

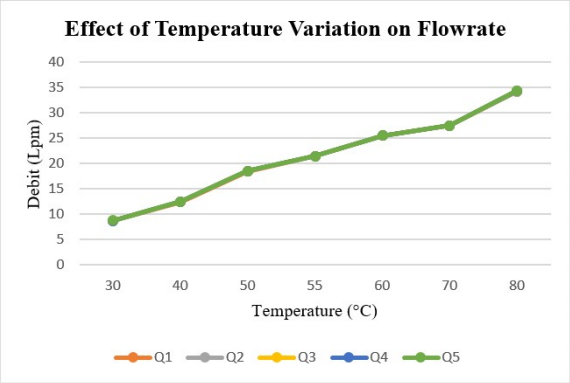

Figure 7. Flowrate Chart of Crude Palm Oil

Table 3. shows that the Crude Palm Oil flow test results increase with increasing temperature. The flow capacity changes at 30°C and 40°C during data collection. At these temperatures, Crude Palm Oil is still very thick. When the pump rotates, the force exerted on the fluid lowers its viscosity value. At a temperature of 50°C, the flow rate still changes in the second data collection. At a temperature of 60°C to 80°C, the Crude Palm Oil flow rate no longer varies after the first data collection.

This unchanged discharge indicates that the viscosity of Crude Palm Oil has reached a point where there is no further change. In addition to the force caused by the rotation of the pump, this is also caused by the given temperature. The high temperature causes the viscosity to decrease. So the pump can distribute Crude Palm Oil more quickly than at low temperatures. The best pump performance at high temperatures, providing a higher flow rate. Meanwhile, at low temperatures, the pump will work harder. This is caused by Crude Palm Oil, which is very thick, so pumping takes longer and will produce a minor discharge. This test proves that the viscosity level of Crude Palm Oil increases the flow rate capacity.

4. Conclusions

An increase in temperature will impact reducing the viscosity of Crude Palm Oil. The changes prove that Crude Palm Oil is classified as a Non-Newtonian Pseudoplastic fluid. Crude Palm Oil's low viscosity provides higher pump performance, as evidenced by the resulting flow rate. The flow rate continues to increase as the viscosity decreases. The constant point of viscosity starts at a temperature of 60°C which is 2.09×10^{-2} Pa.S. So it can be concluded that 60°C is the best temperature for fluid distribution. as evidenced by the amount of flow produced and the constant point of viscosity that has been reached.

Acknowledgement

The researchers wish to thank the PT. Tamora Agro Lestari, Polytechnic Caltex Riau, Department of Mechanical Engineering, and students for their support and cooperation in this research. This paper would not have been possible without the exceptional support of my family and friends. The encouragement is much appreciated.

Reference

[1] Hasibuan, H. A., "Kajian Mutu Dan Karakteristik Minyak Sawit Indonesia Serta Produk Fraksinasinya". Pusat Penelitian Kelapa Sawit, Vol. 14, No. 1 Tahun 2012: 13.

[2] Ariyanti, E.S. dan Agus, M, 2010, "Otomasasi Pengukuran Koefisien Viskositas Zat Cair Menggunakan Gelombang Ultrasonik", Jurnal Neutrino, vol. 2, No. 27 Agustus 2015

[3] Arijanto, Eflita Y., Franklin, T. (2015). "Analisis Pengaruh Kekentalan Fluida Air dan Minyak Kelapa Pada Performansi Pompa Sentrifugal" Semarang: Universitas Diponegoro.

[4] Yusibani, E., Al Hazmi, N., & Yufita, E. (2017). "Pengukuran Viskositas Beberapa Produk Minyak Goreng Kelapa Sawit Setelah Pemanasan". Banda Aceh: Universitas Syiah Kuala.

[5] Munson, Bruce Roy, Donald F. Young, and T. H. Okiishi. 2006. "Fundamentals of fluid mechanics." Hoboken, NJ: J. Wiley & Sons.

[6] Afshin, Keshvadi et al. (2011). "The Effect of High Temperatur on Viscosity of Palm Oil During the Ripening Process of Fresh Fruits." International Journal of Scientific & Engineering Research Volume 2, Issue 6, June -2011 1. ISSN 2229-5518.

[7] Damayanti, dkk. (2018). "Kajian Pengaruh Suhu Terhadap Viskositas Minyak Goreng Sebagai Rancangan Bahan Ajar Petunjuk Praktikum Fisika". Jurnal Pembelajaran Visika, Vol. 7, No.3, September 2018.

[8] Purwanti, A. dan Rahmawati, (2019). "Analisis Proses Pemisah Kadar Produksi Crude Palm Oil (CPO) di PTP Nusantara 1 Tanjung Seumantoh-Aceh Tamiang". Jurnal Hadron, Vol.1, No. 01, Tahun 2019.

[9] Wulandari, dkk (2011). "Sifat Fisik Minyak Kasar dan Korelasinya Dengan Atribut Mutu." Jurnal Teknologi dan Industri Pangan, Vol. XXII No.2, Tahun 2011.